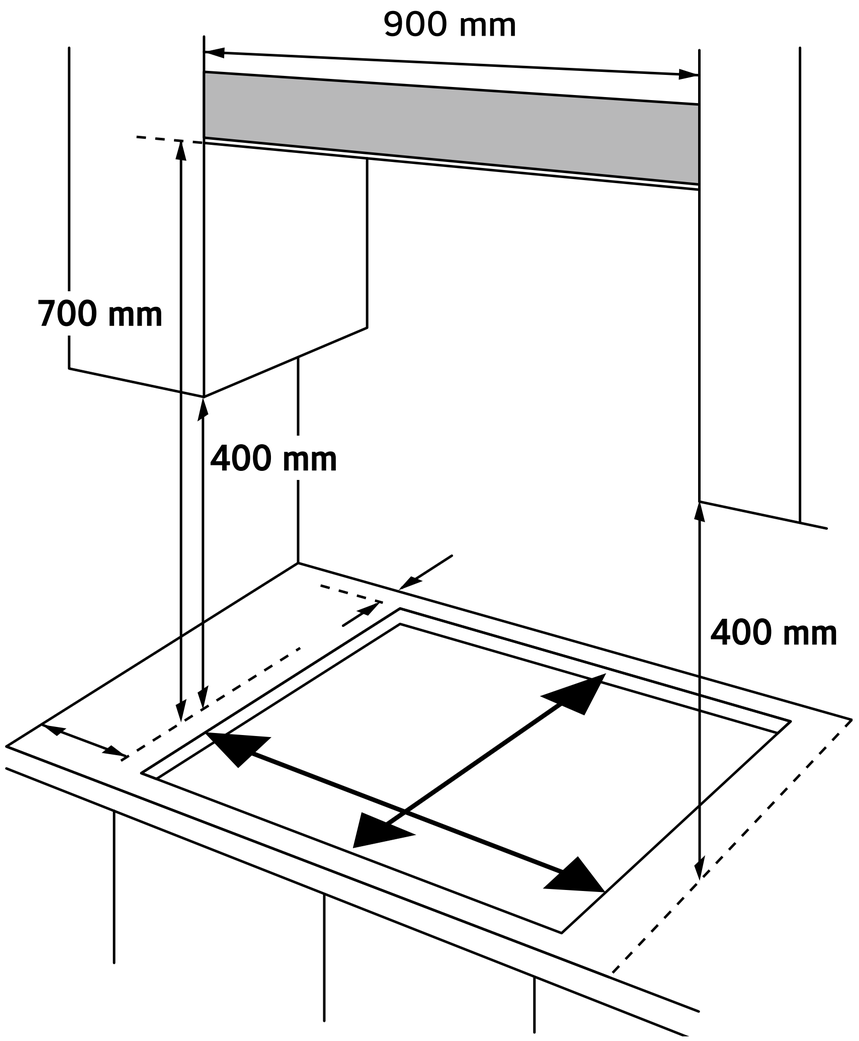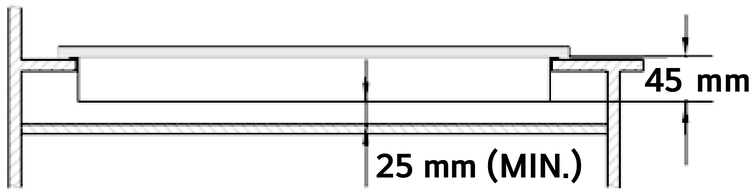Installation Guide for 90cm Gas Hob